CNENGR 116
Fundamentals of Digital Electronics

Lecture 12 – CMOS Technology: Speed, Power and Reliability

Dr Zhongming Zhang

zhongming.zhang@lancaster.ac.uk

School of Engineering

Lancaster University

Science and Technology at Lancaster

Lancaster University College at Beijing Jiaotong University

Objectives

- Understanding the concept of logic family and CMOS technology
- Identifying transistors as building blocks of logic gates
- Explaining electrical aspects of logic gates

CMOS – Complementary Metal-Oxide Semiconductors

Digital Systems Building Blocks

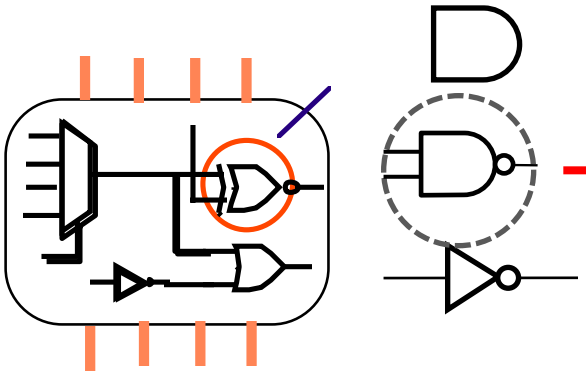

Digital building blocks

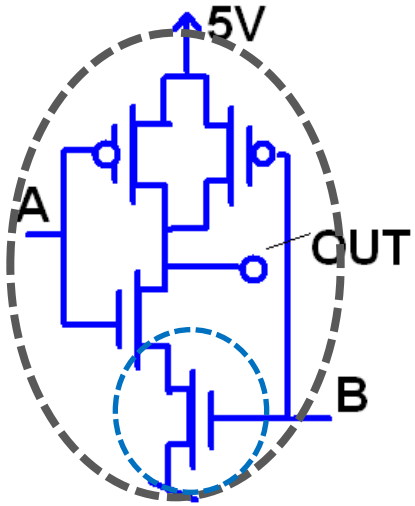

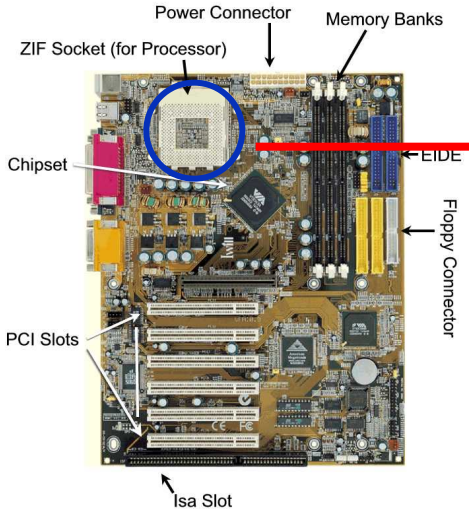

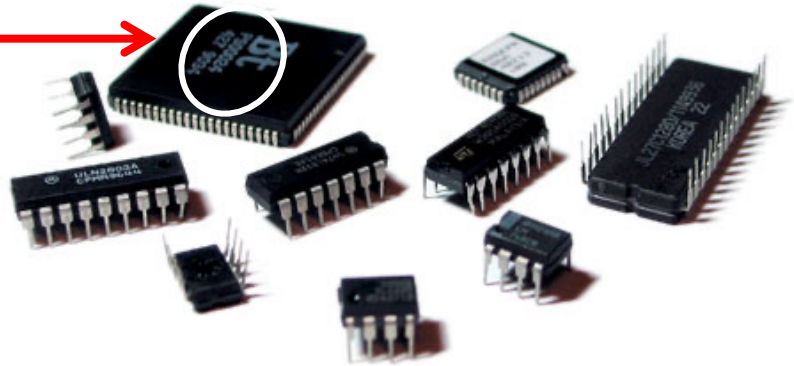

Transistor [Electronic courses]

1. Digital Logic Families

- **Digital devices -** digital circuits are built from analogue components and process electrical voltage and current as input signals to generate the output.

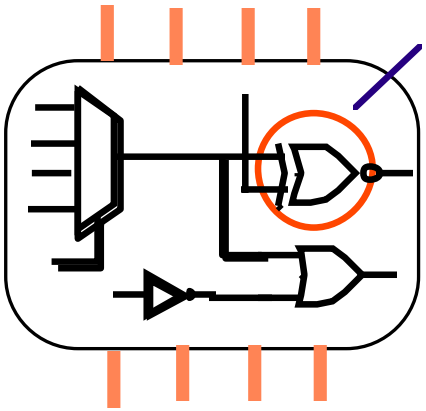

Digital building blocks

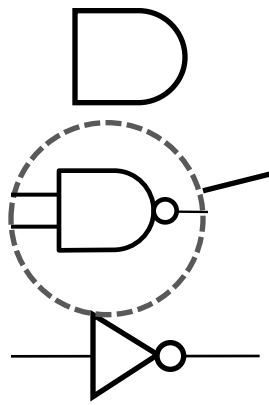

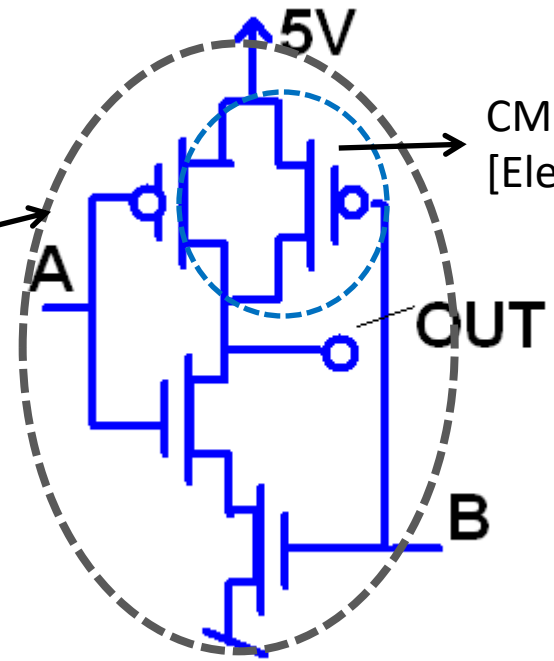

CMOS Transistor
[Electronic courses]

1. Digital Logic Families

- The specific circuit technology used for design of each digital integrated circuit is referred as a **digital logic family.**

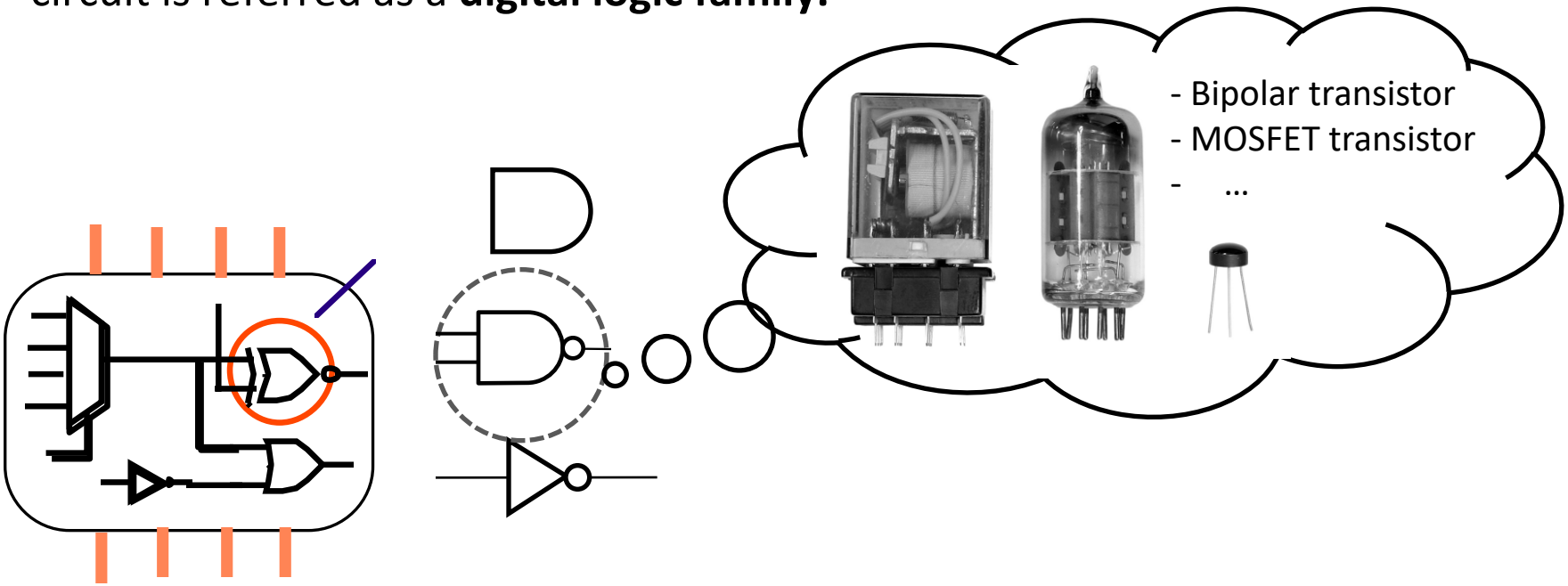

Digital building blocks

1. Digital Logic Families

- **TTL logic family-** Transistor-Transistor Logic (Bipolar transistors)
- **CMOS logic family-** Complementary Metal Oxide Semiconductor (MOSFET transistor)

Technology (Device Type)	Power Consumption	Speed	Packaging
RTL (Bipolar junction)	High	Low	Discrete
DTL (Bipolar junction)	High	Low	Discrete, SSI
TTL (Bipolar junction)	Medium	Medium	SSI, MSI
ECL (Bipolar junction)	High	High	SSI, MSI, LSI
pMOS (MOSFET)	Medium	Low	MSI, LSI
nMOS (MOSFET)	Medium	Medium	MSI, LSI, VLSI
CMOS (MOSFET)	Low	Medium	SSI, MSI, LSI, VLSI
GaAs (MOSFET)	High	High	SSI, MSI, LSI

1.1. CMOS Technology

- **MOSFET (Metal Oxide Semiconductor Field Effect) Transistor**

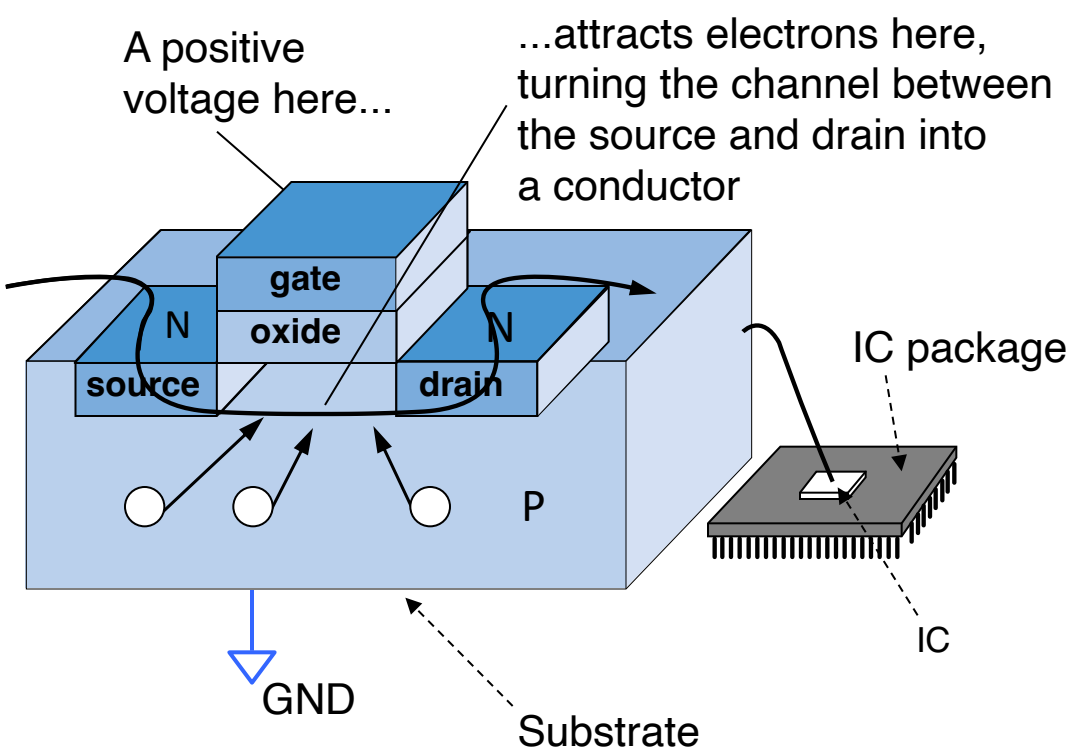

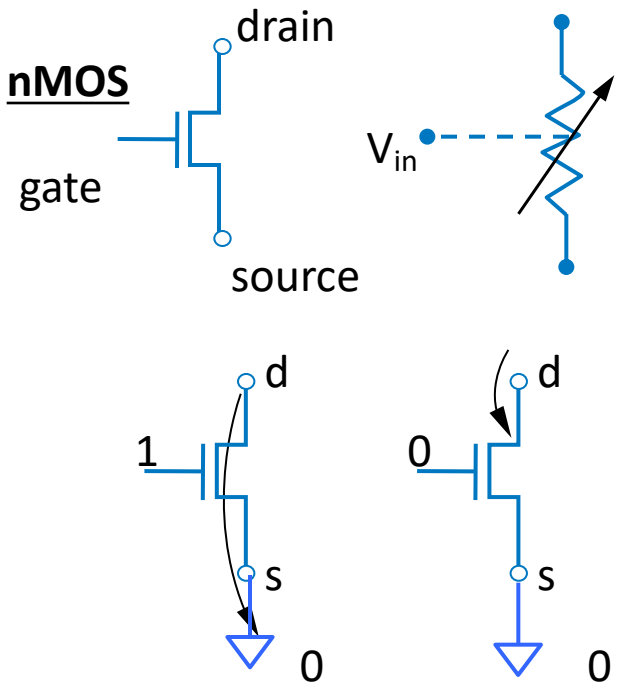

1.1. CMOS Technology

- **MOSFET (Metal Oxide Semiconductor Filed Effect) Transistor**

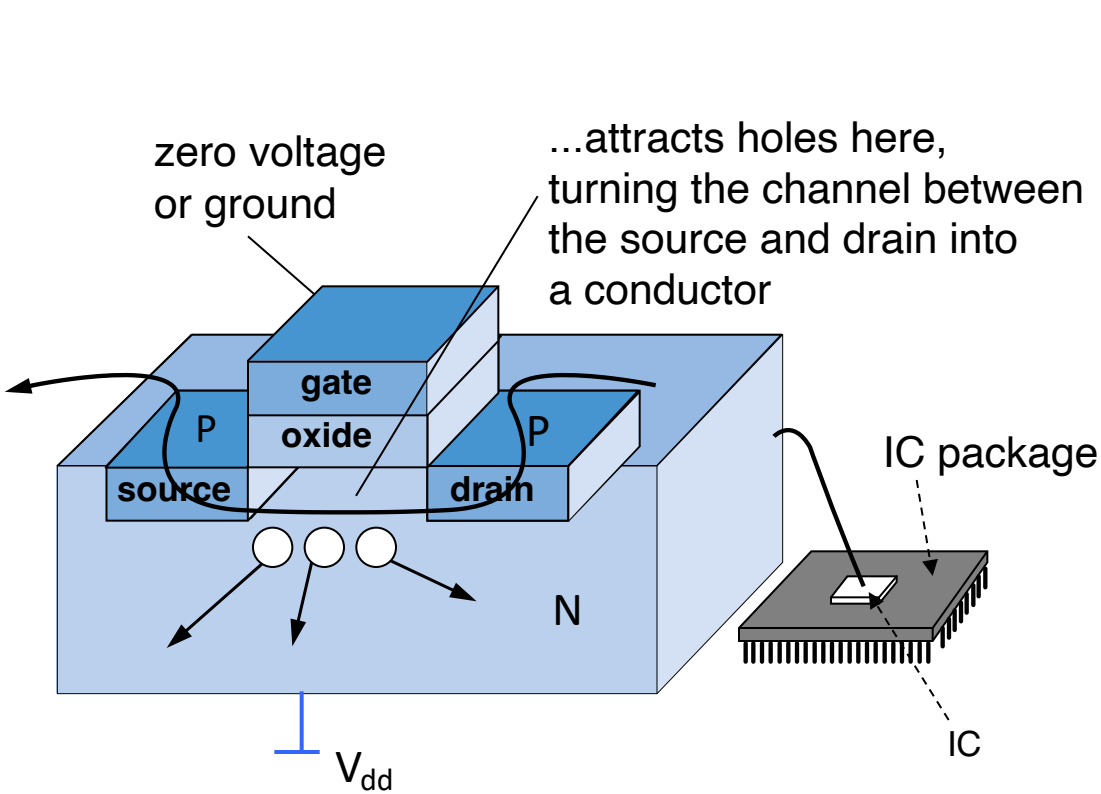

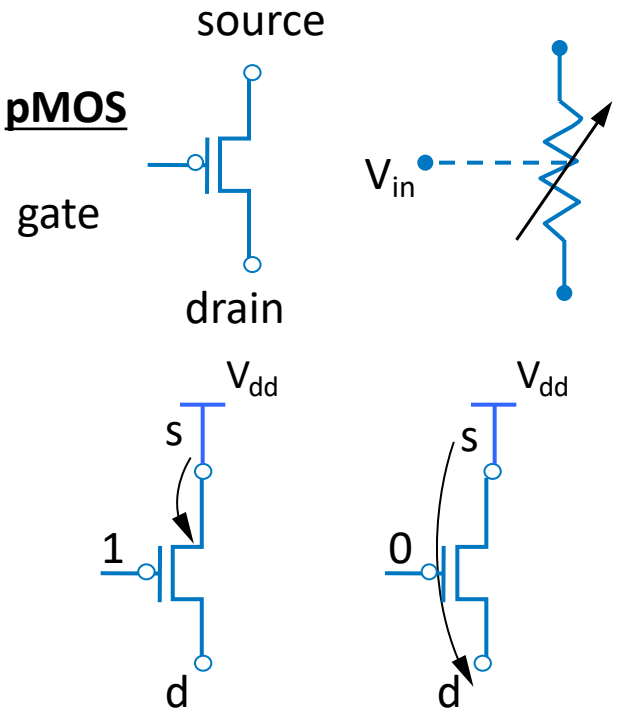

2. Logic Gates and Transistors

Not Gate

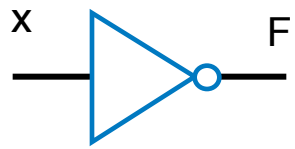

x	F
0	1
1	0

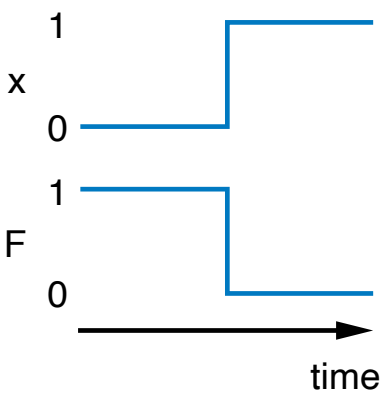

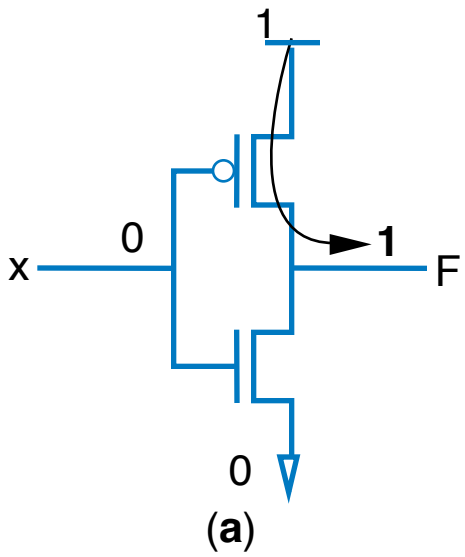

When the input is 0

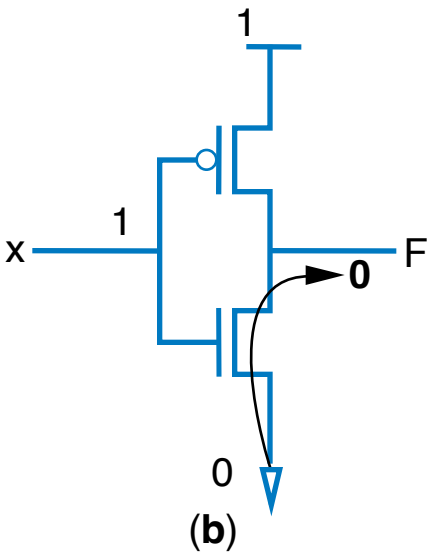

When the input is 1

2.1. A Quick Exercise

- Verify the logic operation of this transistor circuit and fill in the corresponding truth table.

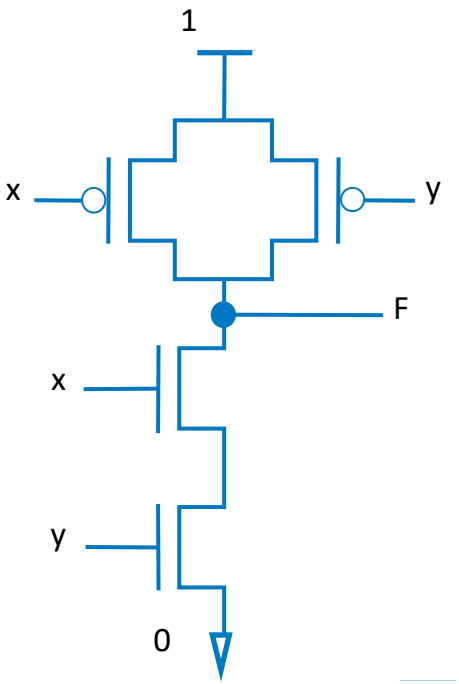

NOT AVAILABLE IN PREVIEW

3. Electrical Aspects of Logic Gates

- **Logic abstraction-** In any logic circuit there is a range of voltage interpreted as LOW or logic 0 and another non-overlapping range interpreted as HIGH or logic 1.

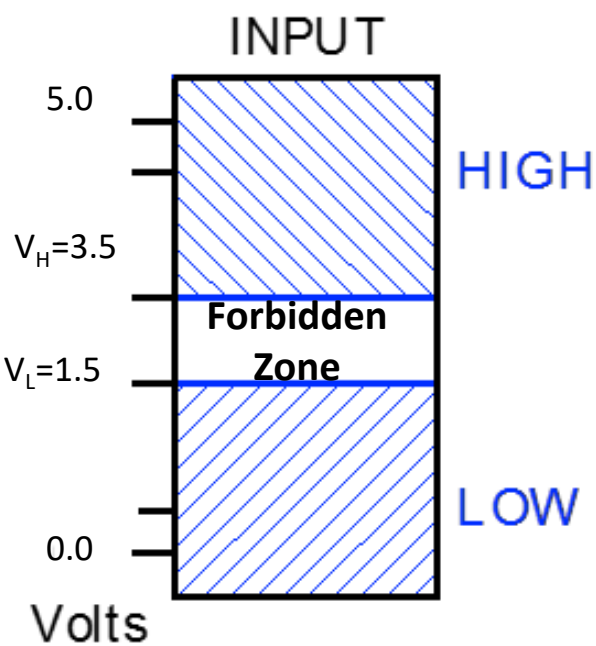

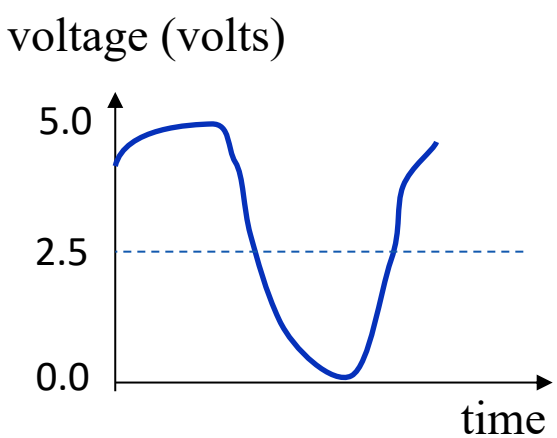

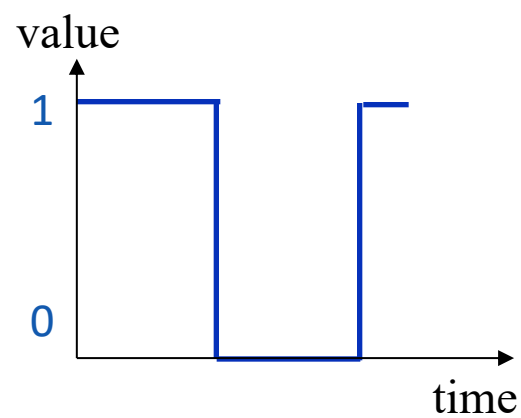

3.1. Electrical Compatibility

- **Electrical compatibility**

$V_{OH} > V_{IH}$
$V_{OL} < V_{IL}$

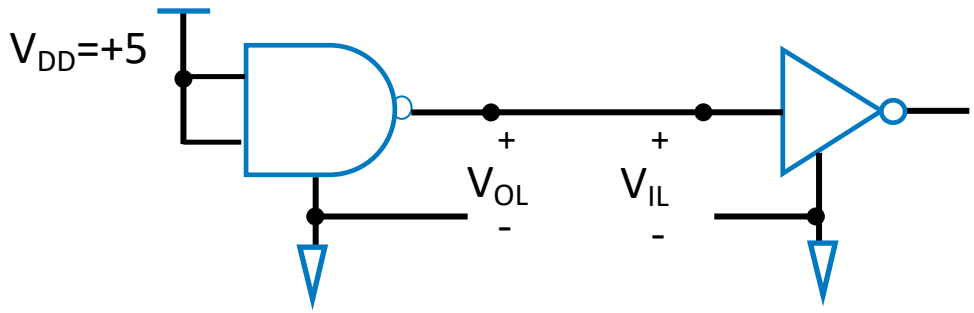

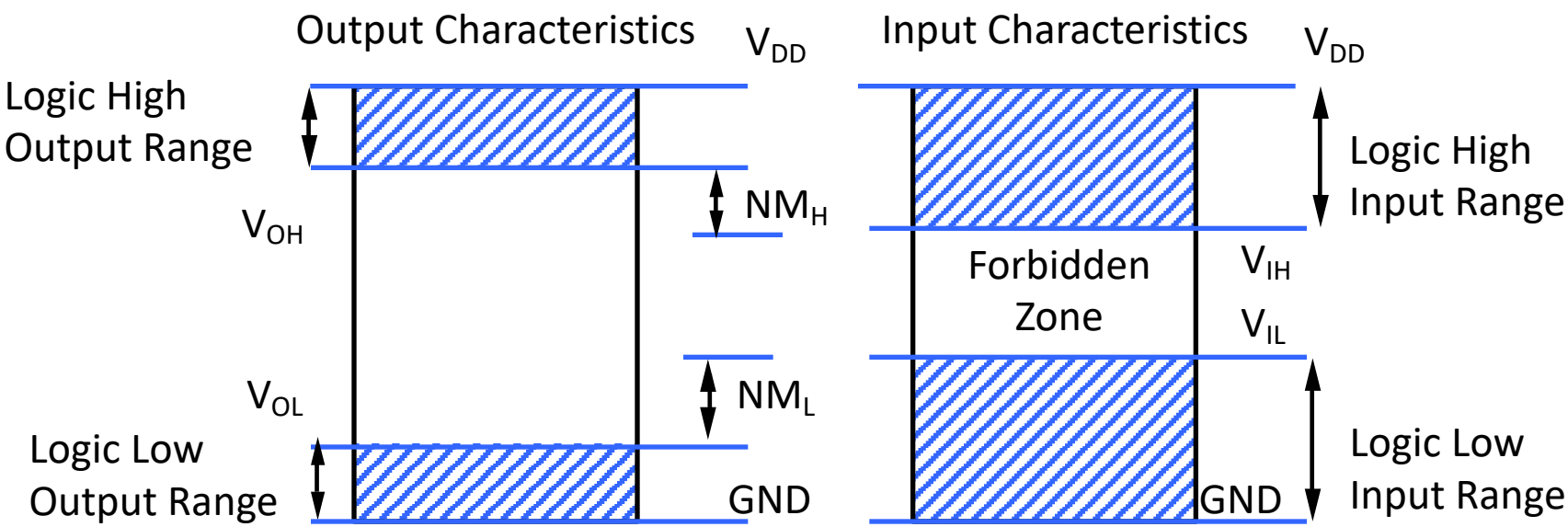

3.1. Electrical Compatibility

- **Noise Margin-**

$NM_H = V_{OH} - V_{IH}$
$NM_L = V_{IL} - V_{OL}$

Ideal case: $NM_H = NM_L = V_{DD}/4$ or $/6$
Real case: $NM_H = NM_L < V_{DD}/4$ or $/6$

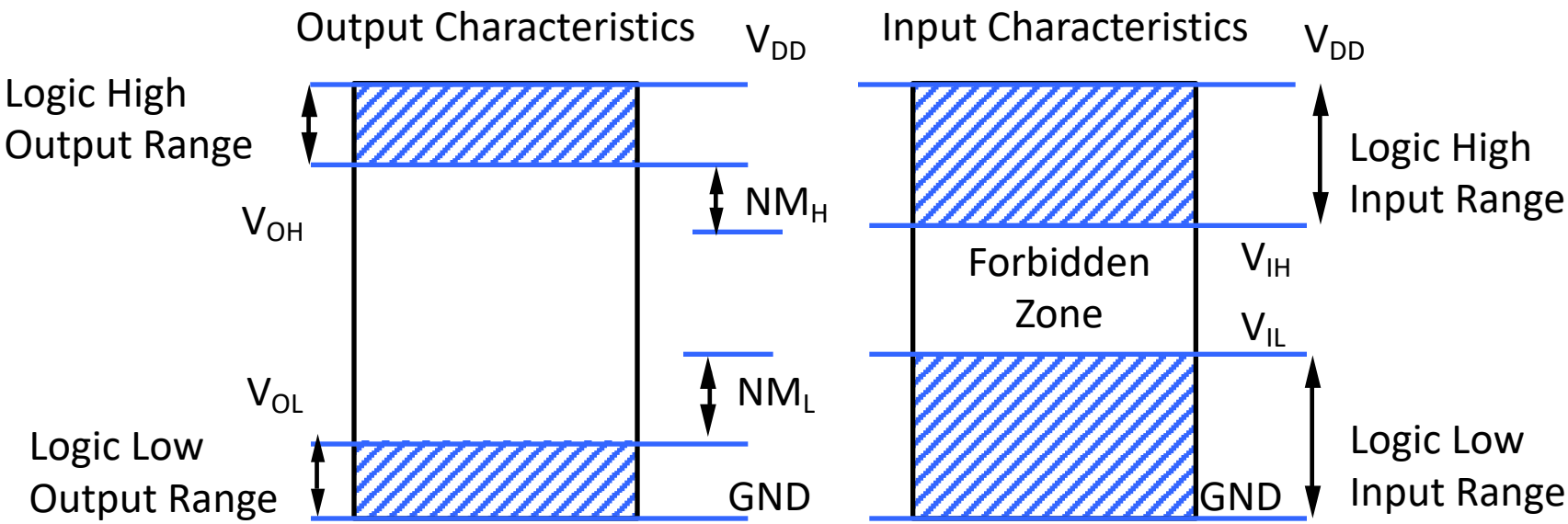

3.2. Speed Characteristics

- **Speed characterization**
  - Transition time
  - Propagation delay

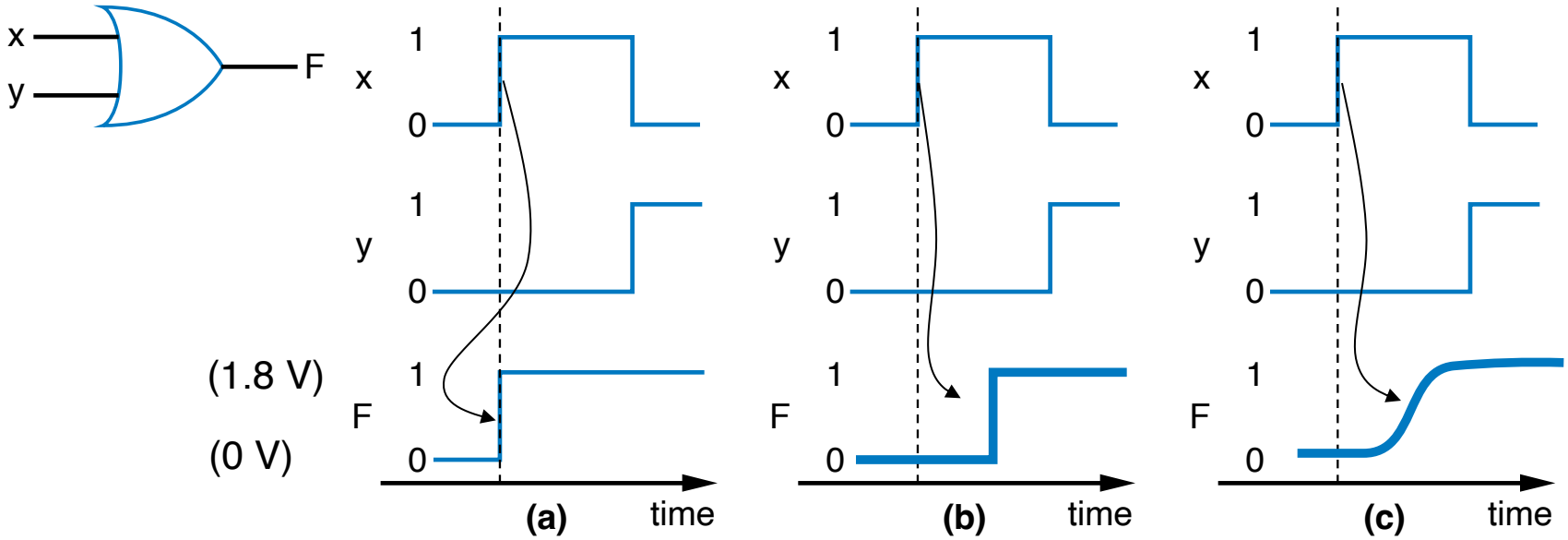

ideal with delay but otherwise ideal more realistic

3.2. Speed Characteristics

- **Transition time-** Inputs or outputs need some time to go from LOW to HIGH or HIGH to LOW
  - This is the time that signal needs to travel from 10% of its final value to 90% of its final value or 90% of its final value to 10%

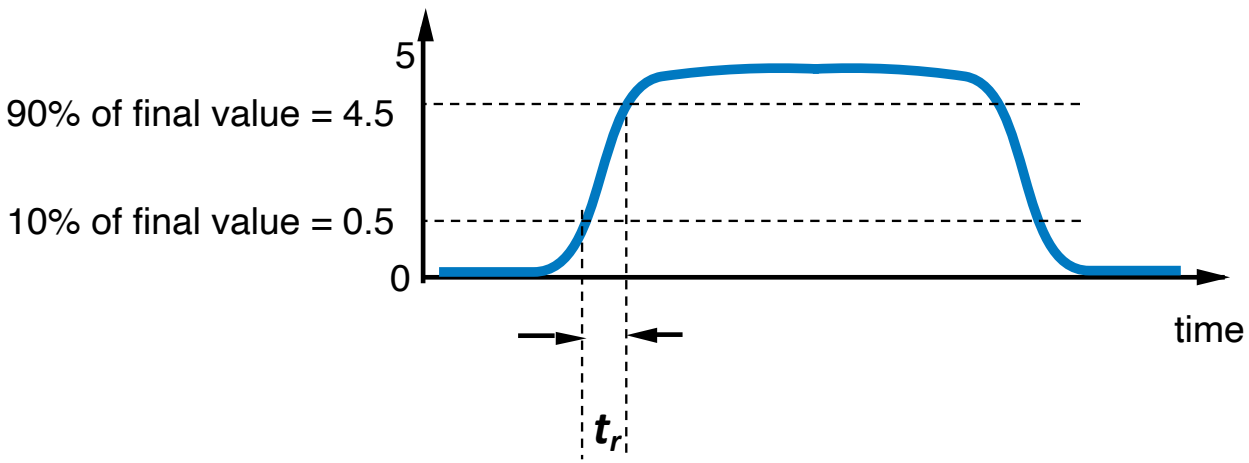

3.2. Speed Characteristics

- **Propagation delay-** Outputs don't change immediately after inputs
  - Determined by transistor switching speed – t_{PLH}, t_{PHL}
  - Wires also have delay

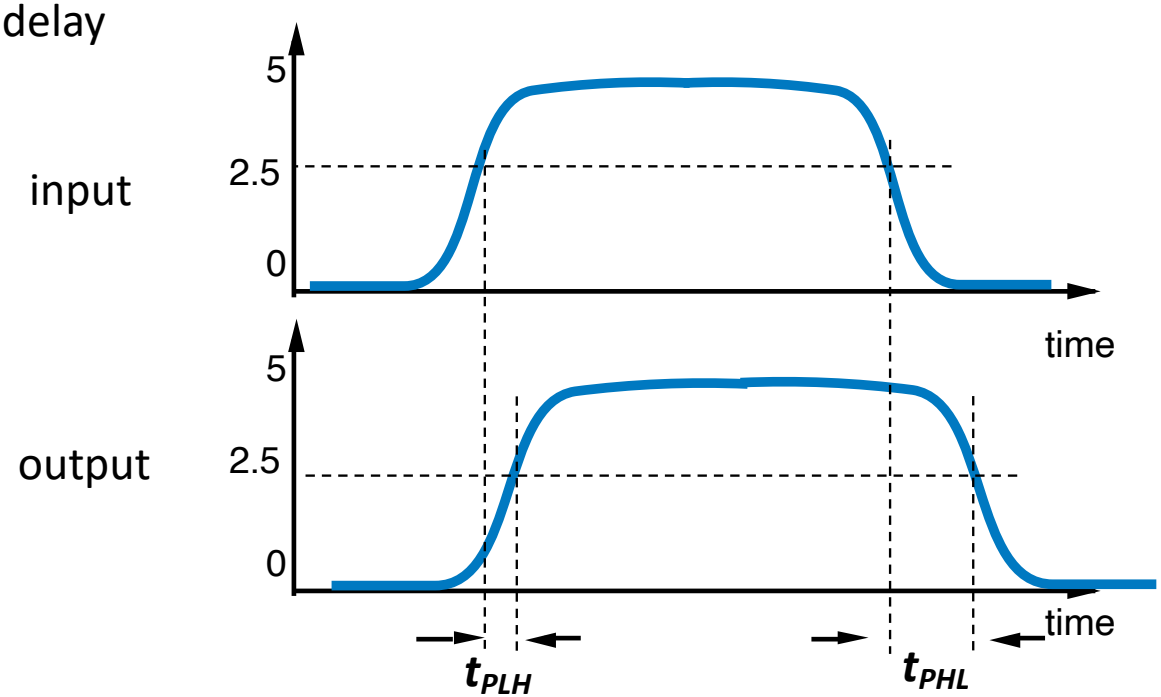

3.2. Speed Characteristics

- **Critical path** – path with longest path delay
- **Circuit delay** – delay of critical path

- **Example:** For this circuit the delay of each gate is shown inside the gate and it is assumed that the wires are without delay. Calculate the delay of the circuit.

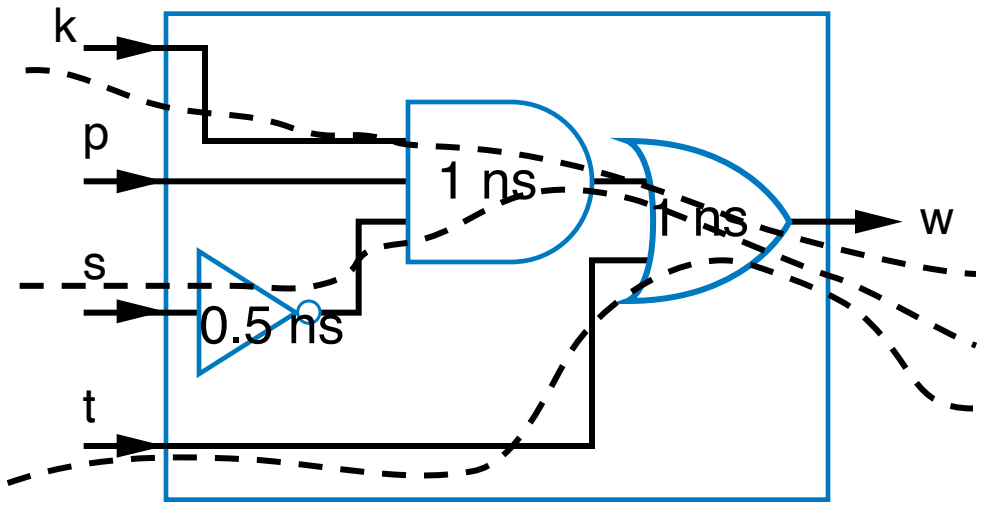

Critical path delay = 2.5 ns
Circuit delay = 2.5 ns

1+1 = 2 ns

0.5+1+1 = 2.5 ns

1 ns

3.3. Power Consumption

- **Static power dissipation-** Power consumption when the output is not changing.
  - CMOS inputs have an extremely large resistance (10^{12}Ohms) that draws essentially no current from the source.
  - Static power consumption is very low $P_{static} = I_{DD} V_{DD}$, where I_{DD} is the leakage current flowing between V_{DD} and ground

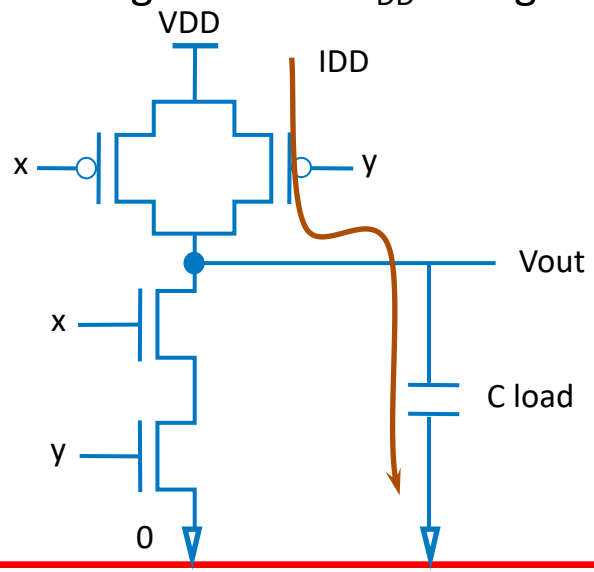

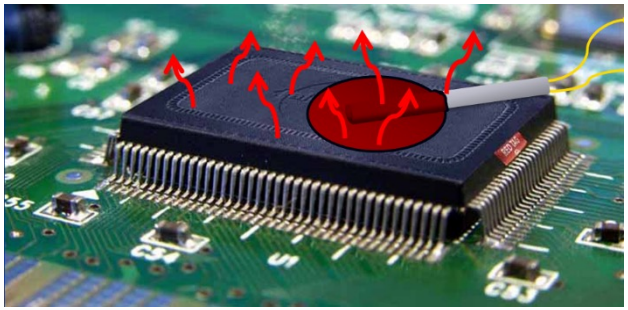

3.3. Power Consumption

- **Dynamic power dissipation -** Power that a CMOS circuit consumes during transitions from one state to another
  - Can be calculated from $P_{dynamic} = \alpha C V_{DD}^2 f$, where C is average capacitance of transistors and wires in circuit, V_{DD} is power supply voltage, f is switching frequency, α is activity factor.

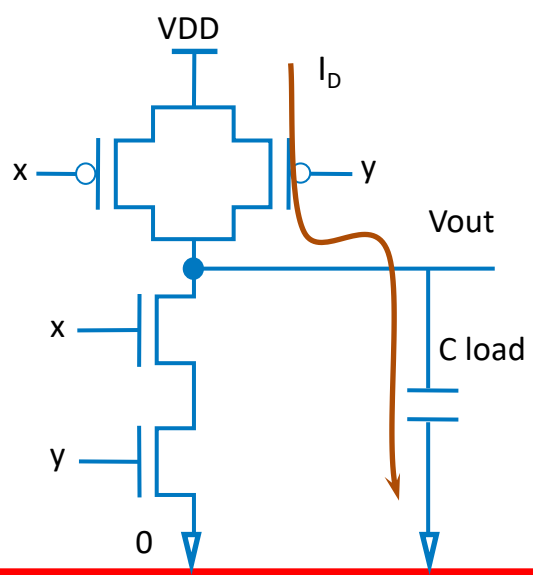

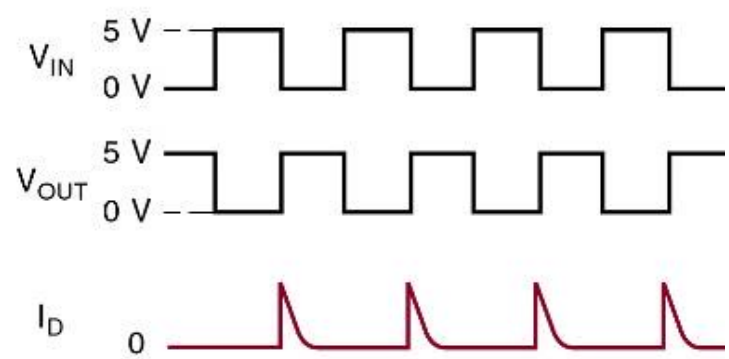

Summary

- Introduced logic families and CMOS technology.
- How to build logic gates from transistors.
- Electrical aspects of logic gates such as electrical compatibility, speed, and power.